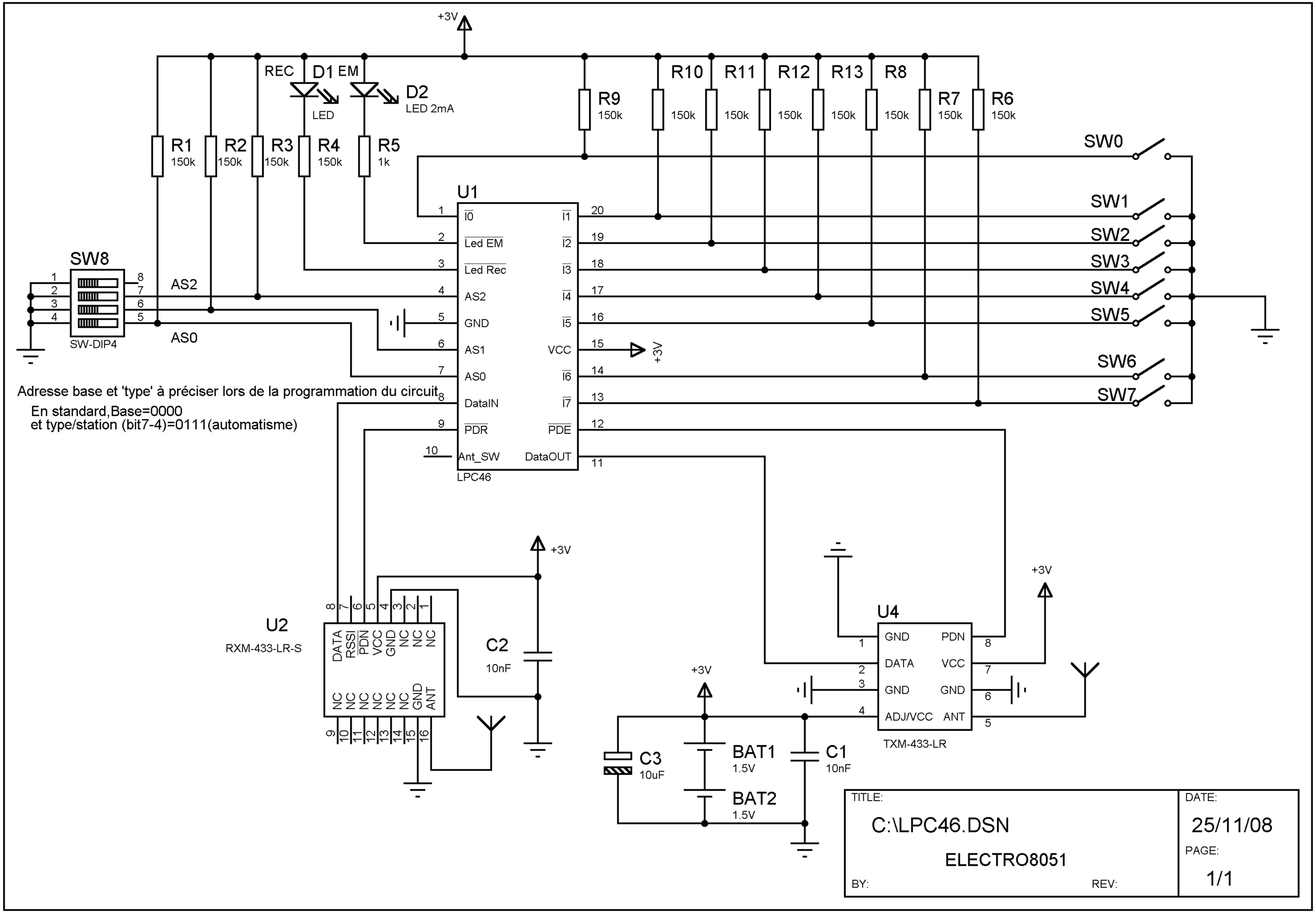
+3V
REC
D1 EM
LED
D2
LED 2mA
R1 150k
R2 150k
R3 150k
R4 150k
R5 1k
R9 150k
R10 150k
R11 150k
R12 150k
R13 150k
R8 150k
R7 150k
R6 150k
SW0
SW1
SW2
SW3
SW4
SW5
SW6
SW7
SW8
SW-DIP4
AS2
AS0
U1
I0
Led EM
Led Rec
AS2
GND
AS1
AS0
DataIN
PDR
Ant_SW
I1
I2
I3
I4
I5
VCC
I6
I7
PDE
DataOUT
LPC46
Adresse base et 'type' à préciser lors de la programmation du circuit
En standard,Base=0000
et type/station (bit7-4)=0111(automatisme)
U2
RXM-433-LR-S
DATA
RSSI
PDN
VCC
GND
NC
ANT
C2
10nF
U4
GND
DATA
GND
ADJ/VCC
PDN
VCC
GND
ANT
TXM-433-LR
C3
10uF
BAT1
1.5V
BAT2
1.5V
C1
10nF
TITLE:
C:\LPC46.DSN
ELECTRO8051
BY:
REV:
DATE:
25/11/08
PAGE:
1/1